Bulletin G-11MR34
August, 2018

LEONARD®
WATER TEMPERATURE CONTROLS

INSTALLATION ADJUSTMENT SERVICE
NEXT GENERATION
HIGH-LOW MANIFOLD SYSTEMS

TM-520B-LF-DT-RF-R34, TM-520B-LF-DT-RF-R1, TM-820B-LF-DT-RF-R34, TM-820B-LF-DT-RF-R1, TM-920B-LF-RF-R-34, TM-920B-LF-DT-RF-R1, TM-1520B-LF-DT-RF-R34, TM-1520B-LF-DT-RF-R1

IMPORTANT! Provide serial numbers for both valves when ordering parts!!

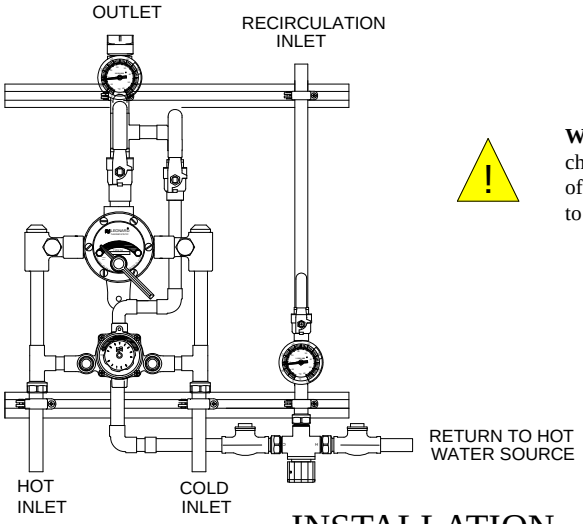

WARNING: This product can expose you to chemicals including lead, which is known to the State of California to cause cancer. For more information, go to www.P65Warnings.Ca.gov

INSTALLATION

1. Type TM manifold systems are factory pre-assembled and tested and include large and small thermostatic water mixing valves which function as a system to meet both high and low demand for tempered water.
2. System should be installed at a location where it can easily be cleaned, adjusted or repaired.
3. System supplies must be connected as shown (Hot-left, Cold-right). Exercise caution when soldering.
4. Flush pipes thoroughly after system has been connected.
5. Refer to page 3 of this bulletin for correct Setup instructions.

Maximum Operating Pressure 125 PSI (860 KPA) for Hot and Cold Water.

CAUTION

All thermostatic water mixing valves have limitations. They will not provide the desired accuracy outside of their flow capacity range. Consult the capacity chart on page 9. Minimum flow must be no less than as shown.

REMEMBER! THIS IS A CONTROL SYSTEM WHICH MUST BE CLEANED AND MAINTAINED ON A REGULAR BASIS (SEE MAINTENANCE GUIDE AND RECORD MGR-1000).

1360 Elmwood Avenue, Cranston, RI 02910 USA
Phone: 401.461.1200 Fax: 401.941.5310
Email: info@leonardvalve.com
Web Site: http://www.leonardvalve.com

ADJUSTMENT AND SERVICE

Leonard Type TM Thermostatic Water Mixing Valves are simple in design and may be easily cleaned, adjusted and repaired. If the installation is accessible, servicing may be completed without disconnecting the valves.

NOTE: High Low Manifold Systems include Thermostatic Water Mixing Valves, which must be regularly maintained to provide best performance. Frequency of cleaning depends on quality of local water conditions and usage. See Maintenance Guide and Record MGR-1000.

WARNING

These mixing valves are equipped with an adjustable high temperature limit stop factory set at approximately 120°F (49°C) with an incoming hot water supply temperature of 150°F (65.5°C). If the hot water supply temperature of the job is greater than 150°F (65.5°C), the valves when turned to full HOT will deliver water in excess of 120°F (49°C) and the limit stops **MUST BE RESET BY THE INSTALLER!**

TO RESET ADJUSTABLE HIGH TEMPERATURE LIMIT STOP:

Serial# s starting with 52, 82, 92, 152

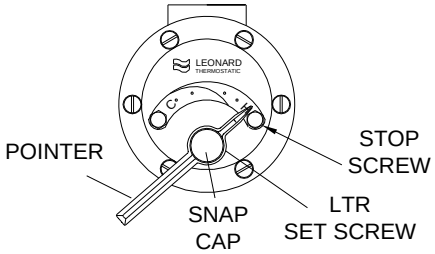

1. Loosen LTR set screw.
2. Remove SNAP CAP, SCREW & WASHER. Remove POINTER.
3. Temporarily place POINTER on the spline rod, turn RIGHT for warmer temperature, turn LEFT for cooler temperature. When valve is delivering warmest temperature desired, remove the pointer.
4. Replace POINTER on the spline rod so that its RIGHT edge is resting against the STOP SCREW located on the RIGHT SIDE OF THE COVER.
5. The new maximum temperature has now been set. Test this temperature by holding a thermometer under the flow of water to be certain it is as desired.

*** LIMIT STOP MUST BE RESET AND RECHECKED EACH TIME HANDLE IS REMOVED.**

TM-26

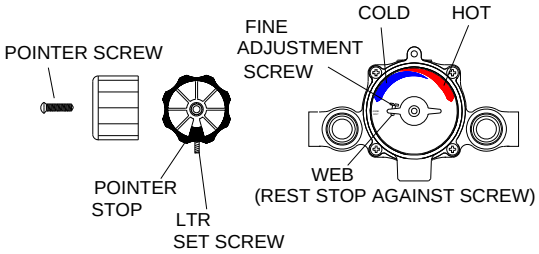

1. Loosen LTR SET SCREW, remove POINTER SCREW.
2. Adjust POINTER to maximum desired temperature.
3. Remove POINTER, replace POINTER on spline rod with STOP (which is cast into the underside on the pointer), resting against the BOTTOM side of the WEB on the FINE ADJUSTMENT SCREW.
4. If fine adjustment is needed, adjust FINE ADJUSTMENT SCREW on the cover, loosen for hotter or tighten for cooler temperature.
5. Replace POINTER and check temperature, if set to desired temperature replace POINTER SCREW, and tighten LTR SET SCREW.
6. The new maximum temperature has now been set. Test this temperature by holding a thermometer under the flow of water to be certain it is as desired.

*** LIMIT STOP MUST BE RESET AND RECHECKED EACH TIME HANDLE IS REMOVED.**

IMPORTANT! BOTH MIXING VALVES MUST BE SET AT THE SAME OPERATING TEMPERATURE.

SEE PAGES: 7 & 8 FOR COMPLETE PARTS BREAKDOWN

Check for significant variations in outlet flow. Thermostatic valves will NOT provide the desired accuracy outside of their flow capacity range. Minimum flows must be no less than shown (see Flow Capacities, page 9).

REMEMBER! THIS IS A CONTROL DEVICE WHICH MUST BE CLEANED AND MAINTAINED ON A REGULAR BASIS. (SEE MAINTENANCE GUIDE AND RECORD, MGR-1000).

SETUP INSTRUCTIONS

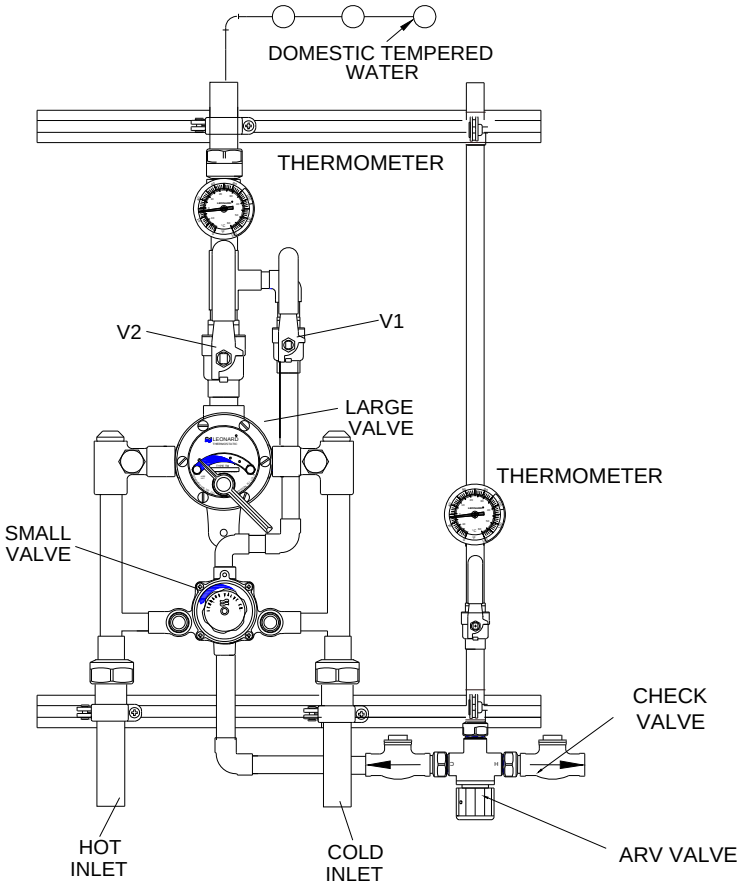

1. Make sure hot and cold supplies to this assembly are operating. The temperature of the hot water source must be properly set and maintained.

2. The circulator (if used) must be turned OFF before setup.

3. Turn on enough fixtures for a flow of at least * downstream from this system. Make sure each fixture is set to deliver full "HOT" water.

*8 GPM (30 l/min.) if TM valve is a TM-50 (Serial #52)
*13 GPM (45 l/min.) if TM valve is a TM-80 (Serial #82)
*13 GPM (45 l/min.) if TM valve is a TM-90 (Serial #92)
*18 GPM (68 l/min.) if TM valve is a TM-150 (Serial #152)

5. Close outlet Valve V1 for the smaller (bottom) Type TM Valve.

6. Make sure valve V2 for the large Type TM Valve is in the full open position.

7. Set outlet temperature of the large Type TM Valve to the required temperature.

8. Open outlet Valve V1 for the small TM Valve.

9. Shut outlet Valve V2 for the large TM Valve.

10. Turn on enough fixtures for a flow of at least 2 GPM downstream from this system. Make sure each fixture is set to deliver full "HOT" water.

11. Set outlet temperature of the small (bottom) TM Valve to the same temperature as step 7.

12. Open outlet Valve V2. System is operational.

13. IMPORTANT!! See page 4 to balance recirculation system.

REQUIRED METHOD OF PIPING TM VALVES (RECIRCULATED HOT WATER SYSTEMS)

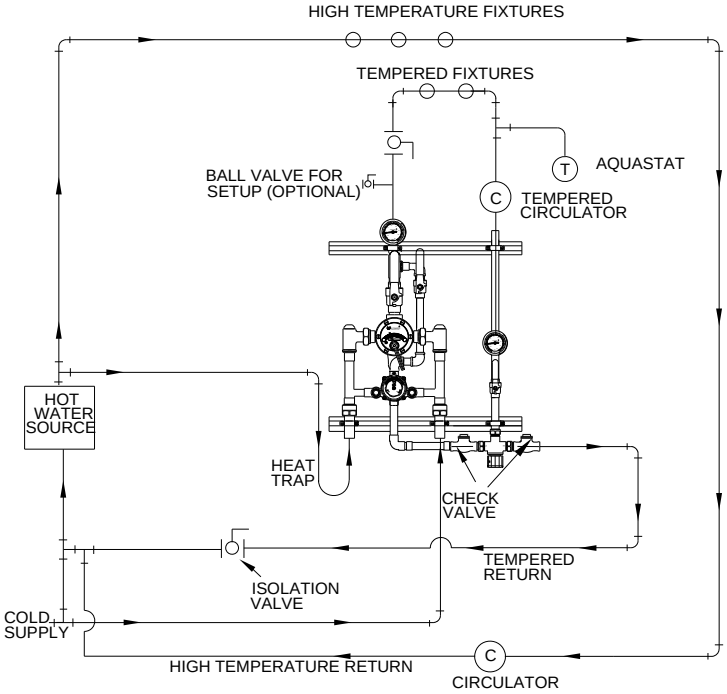

METHOD #2

Required when **TEMPERED** water is to be circulated through the entire building, to maintain tempered water at each fixture. The function of the 1/2" by-pass is to allow the recirculated water to pass through the mixing valve during periods of no draw without entering the hot water source to avoid being reheated. The 370ARV valve allows the system to be properly balanced. See set-up instructions below.

METHOD #2 SET-UP INSTRUCTIONS

1. **Before any attempt is made to adjust this system, be sure the temperature of the hot water at the source is properly set and maintained.**
2. **Be sure system is piped correctly.**
3. **Turn circulator off, set mixing valve to the desired temperature, (see page 3).**
4. **Shut off all fixtures. Note: At this point, be sure NO water is being drawn through any fixture until the temperature in the recirculated line has been set.**
5. **Open the ball valve fully and start the circulator.**
6. **Observe the temperature until it stabilizes.**
7. **Adjust 370 ARV counter clockwise (coming out of valve body) slightly if warmer temperature is desired or clockwise (going into valve body) if cooler water is desired. Allow to stabilize. Repeat until the desired recirculated temperature is set.**
8. **Note: If optional RP1 option is installed (1" return line) a circuit setter replaces the 370ARV. Open circuit setter slightly if warmer temperature is desired or close slightly if cooler water is desired. Allow to stabilize. Repeat until the desired recirculated temperature is set.**

WARNING: THIS PIPING METHOD WILL NOT PERFORM EFFECTIVELY IF THE VALVE IS OVERSIZED. MINIMUM FLOWS ARE SHOWN ON FLOW CAPACITIES CHART, PAGE 9. FOR ESTIMATING MAXIMUM HOT WATER DEMAND, CONSULT LEONARD CASPAK SIZING PROGRAM.	**DO NOT CONFUSE THE MINIMUM FLOW REQUIREMENTS OF THE MIXING VALVE WITH PROPER SIZING OF THE CIRCULATOR.**

MODEL 370ARV

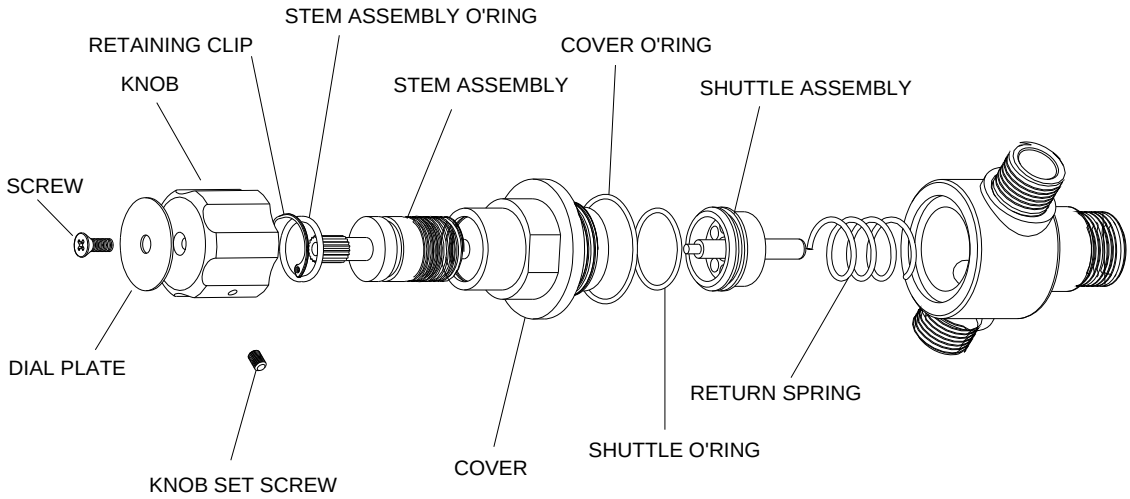

DISMANTLING & CLEANING

1. Shut off hot and cold water to the valve as well as the valve outlet port.
2. Loosen lock screw on side of knob with 5/64” allen wrench.
3. Remove the knob screw on top of knob.
4. Remove temperature adjustment knob.
5. Remove valve cover, which includes the stem assembly.
6. The shuttle assembly can now be removed, cleaned and inspected. Be sure to check the condition of the shuttle o-ring and replace if necessary.
7. Lubricate the shuttle o-ring before installing the shuttle assembly.
8. Install the cover assembly including o-ring back onto valve and tighten.
9. Replace knob and knob screw.
10. **Valve temperature must be reset after any repairs or cleaning!!**

TROUBLESHOOTING

1. Leaking water under knob, order gasket kit, replace stem assembly o-ring. Remove knob screw and knob, remove retaining clip, thread out the stem assembly and replace o-ring. Lubricate o-ring, thread stem into cover, replace retaining ring, knob and screw. **Valve temperature must be reset after any repairs or cleaning!!**
2. Leaking water between cover and body, order gasket kit, replace cover o-ring. Remove knob screw and knob and remove valve cover and replace o-ring. Replace valve cover, knob and knob screw. **Valve temperature must be reset after any repairs or cleaning!!**
3. Valve not controlling temperature even after cleaning, order complete rebuild kit. Remove knob screw and knob and remove valve cover. Replace shuttle assembly and return spring being sure to lubricate shuttle o-ring. Replace valve cover, knob and knob screw. **Valve temperature must be reset after any repairs or cleaning!!**

REPAIR KITS

	MODEL 370 ARV
Leaking water under knob. Leaking water between valve cover and body.	**1/ WX** Gasket Kit Shuttle o’ring Stem assembly o’ring Cover o’ring
Valve will not control temperature after cleaning.	**R/ 270/370** Complete Rebuild Kit Return spring Shuttle assembly Shuttle o’ring Stem assembly o’ring Cover o’ring

INSTRUCTIONS FOR SERVICING LARGER TM VALVE

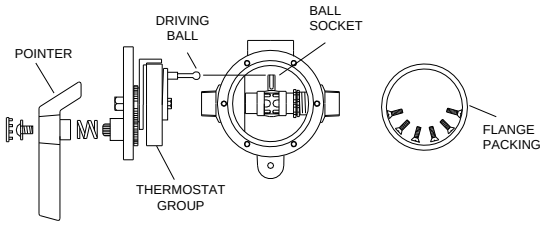

1. Shut off hot and cold supplies to this valve, loosen LTR set screw, remove snap cap, screw and washer, friction spring, remove pointer.
2. Remove, cover screws and cover, to which the thermostat group is attached.

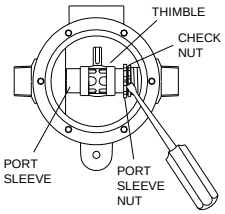

3. To clean port sleeve assembly (the thimble must slide freely on the port sleeve): unscrew the check nut as far as it will go, then screw the port sleeve nut into the base. The port sleeve and thimble may then be lifted out.
4. Clean with a non-corrosive cleaning solution. **DO NOT USE ABRASIVES!** The port sleeve should be reassembled in the valve with the shoulder to the left.
5. To clean thermostat group brush in a non-corrosive cleaning solution.
6. When reassembling, make sure driving ball of thermostat group engages the ball socket of the port sleeve assembly.

INSTRUCTIONS FOR SERVICING SMALLER TM VALVE

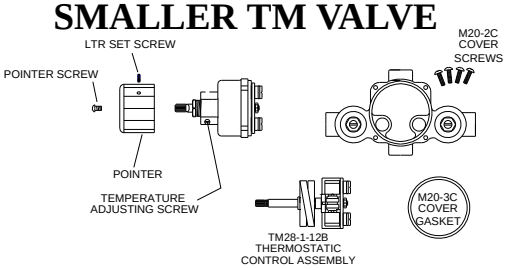

1. Loosen LTR set set screw.
2. Remove pointer screw, and pointer.
3. Turn off hot and cold supplies at screwdriver checkstops. Remove M20-2C cover screws to release cover and thermostatic control assembly.
4. To remove bridge assembly,TM28-1-8B, remove pointer rod nut (MU-10B) and pull bridge assembly off control rod.

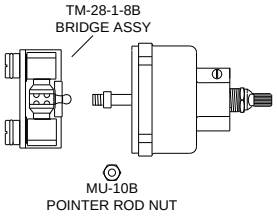

5. To clean, submerge bridge in clean water or non-corrosive cleaning solution. **DO NOT USE ABRASIVES!** Be certain thimble moves freely on port sleeve. Note! Driving ball must engage slot in coil bracket when reassembling.
6. To clean thermostat coil, loosen gland nut. Push rod through cover. Be careful not to pull coil out of shape.
7. Clean with a non-corrosive cleaning solution. **DO NOT USE ABRASIVES!**

TROUBLESHOOTING INSTRUCTIONS

Note: Provide valve serial number when ordering parts for either valve!

		Large Valve (52,82)	**Large Valve (92)**	**Large Valve (125)**	**Small Valve (TM-26)**
PACKING & GASKETS	1. Leak between valve cover and base. Leak at stem.	Repair Kit 1/50Y	Repair Kit 1/50Y	Repair Kit 1/125Y (125)	Repair Kit 1/26 (Packings & Gaskets)
PORT SLEEVE /BRIDGE ASSEMBLY	2. Valve delivers either all hot or all cold water, or will not mix consistently.	Repair Kit R/50	Repair Kit R/90	Repair Kit R/125	Repair Kit R/28 (Rebuilding Kit) or TM28-1-8B Bridge Assembly
THERMOSTAT GROUP	3. After cleaning or replacing port sleeve / bridge assembly, valve performance is not consistent.	Repair Kit R/50 or TGM-50	Repair Kit R/90 or TGM-90	Repair Kit R/125 or TGM-125	Repair Kit R/28 (Rebuilding Kit) or TM28-G2 Thermostat Group
CHECKSTOPS	4. Hot water by-pass into cold line (or cold into hot). Supplies cannot be shut off completely. Supplies leak at checkstop bonnets.	Repair Kit 2/50Y	Repair Kit 2/50Y	Repair Kit 2/50Y	Repair Kit 4/M20

See pages 7 & 8 for parts Breakdowns

TM VALVE PARTS
1” INLET & LARGER

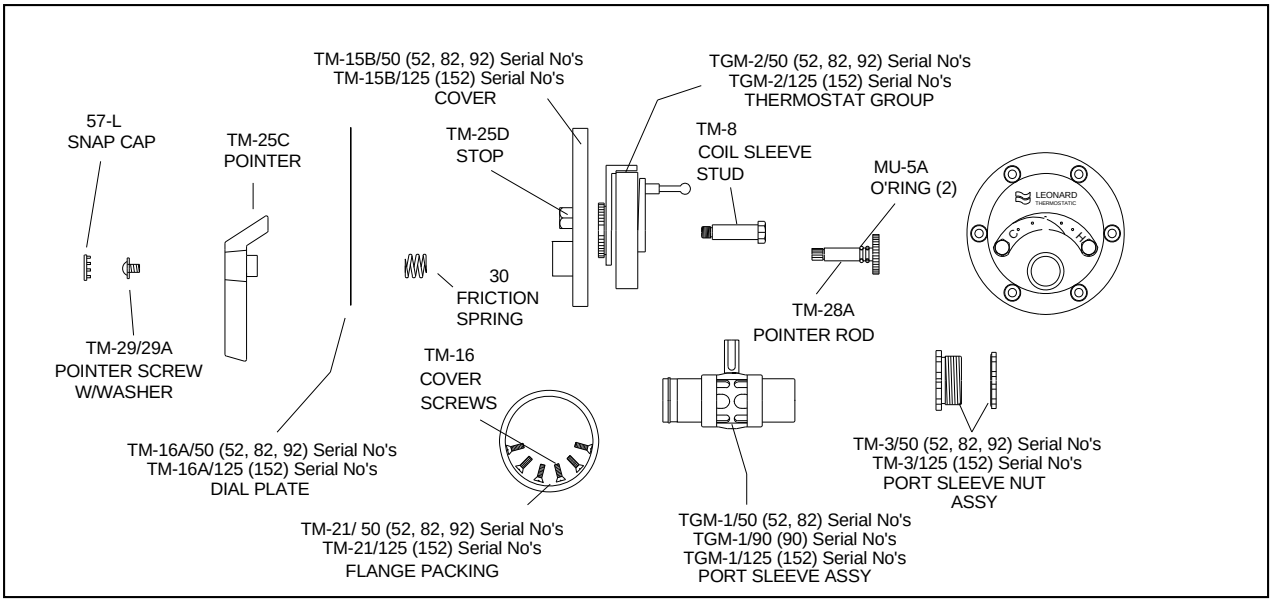

CHECKSTOP PARTS

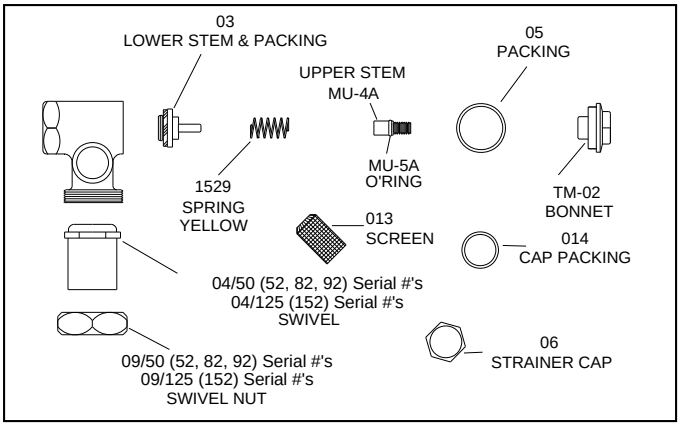

LOCK-TYPE POINTER

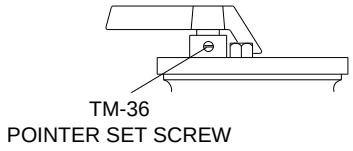

REMEMBER! THIS IS A CONTROL DEVICE WHICH MUST BE CLEANED AND MAINTAINED ON A REGULAR BASIS. SEE MAINTENANCE GUIDE AND RECORD MGR-1000.

NOTE: AFTER INSTALLING NEW PARTS IT WILL BE NECESSARY TO RESET THE ADJUSTABLE HIGH TEMPERATURE LIMIT STOP ON EACH VALVE (SEE PAGE 2).

REPAIR KITS

REPAIR KIT 1/50Y 520,820,920 PACKINGS & GASKETS (52, 82, 92)
REPAIR KIT 1/125Y PACKINGS & GASKETS (125)

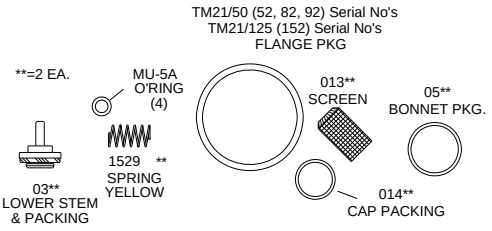

REPAIR KIT R/50 TM-520,820 REBUILDING KIT (52, 82)
REPAIR KIT R/90 TM-920 REBUILDING KIT (92)
REPAIR KIT R/125 TM-1520A REBUILDING KIT (125)

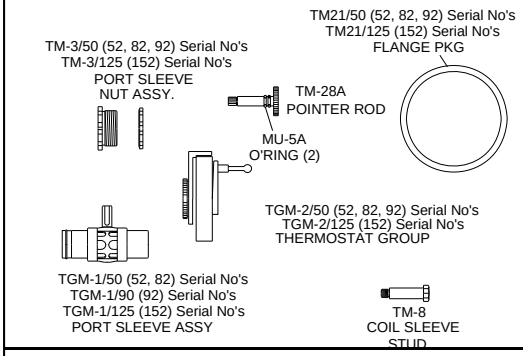

REPAIR KIT 2/50Y CHECKSTOP KIT

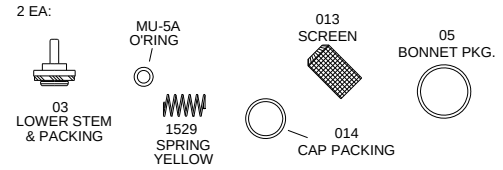

TM-26 VALVE PARTS (BOTTOM VALVE)

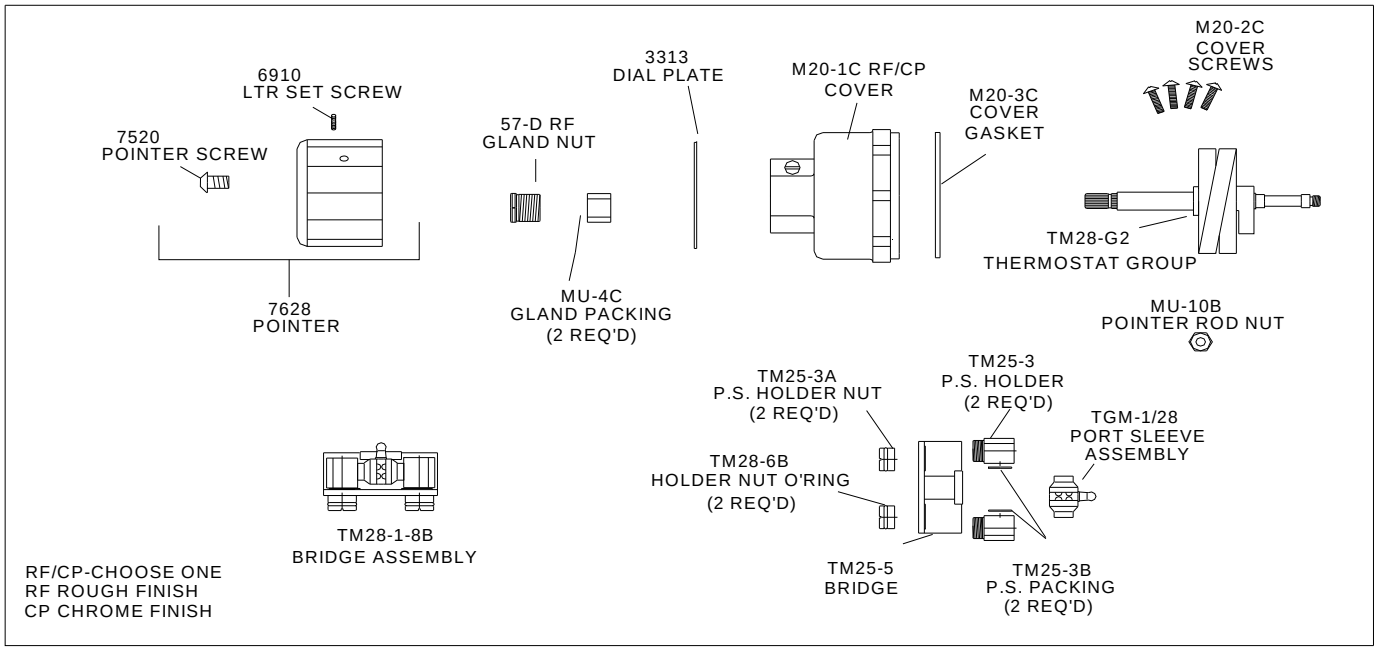

CHECKSTOP PARTS

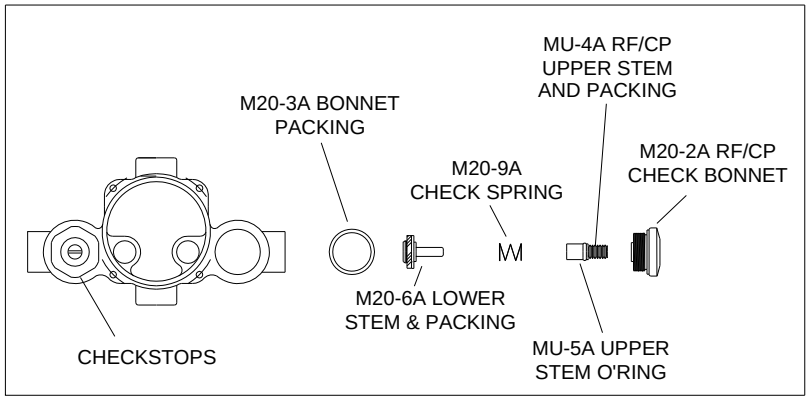

REPAIR KITS

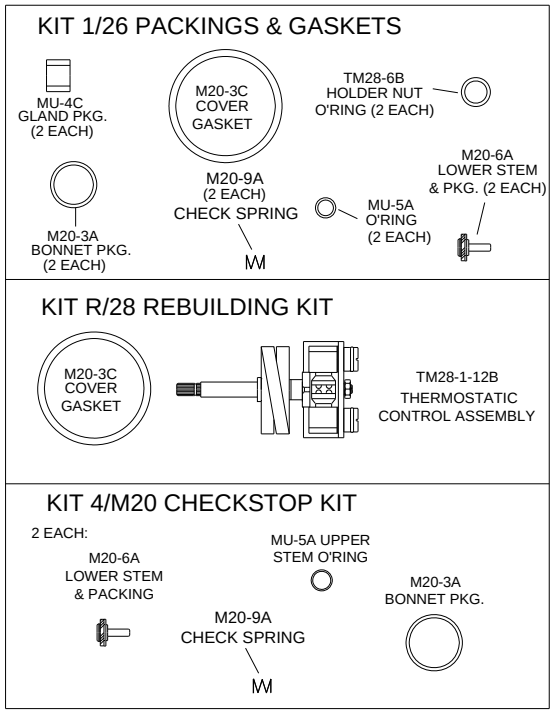

REMEMBER! THIS IS A CONTROL DEVICE WHICH MUST BE CLEANED AND MAINTAINED ON A REGULAR BASIS (SEE MAINTENANCE GUIDE AND RECORD).

NOTE: AFTER INSTALLING NEW PARTS IT WILL BE NECESSARY TO RESET THE ADJUSTABLE HIGH TEMPERATURE LIMIT STOP ON EACH VALVE (SEE PAGE 2).

OPTIONAL OUTLET SETUP PIPING
(BY OTHERS)

The addition of this piping arrangement (extra tee and ball valve) eliminates the need to turn showers on and off throughout the building at setup. The flows required in the setup instructions (page 3) are set by using Ball Valve A. (make sure main outlet ball valve is closed).

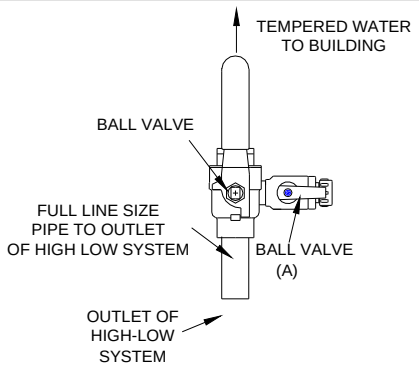

CAUTION! ALL THERMOSTATIC WATER MIXING VALVES AND SYSTEMS HAVE LIMITATIONS! THEY WILL NOT PROVIDE THE DESIRED PERFORMANCE OUTSIDE OF THEIR FLOW CAPACITY RANGE! CONSULT THE CAPACITY CHART BELOW AND OBSERVE MINIMUM FLOWS SHOWN.

FLOW CAPACITIES

MODEL	IN	OUT	MINIMUM FLOW (GPM) (l/min)	SYSTEM PRESSURE DROP (PSIG) 5	10	15	20	25	30	35	40	45	50	PSI
				.3	.7	.97	1.4	1.7	2.1	2.4	2.8	3.1	3.4	BAR
TM-520B	3/4"	1"	1.0	19	29	38	45	51	56	62	68	72	75	GPM
			(3.8)	72	110	144	170	193	212	235	257	272	284	l/min
TM-820B	1"	1 1/4"	1.0	26	40	48	58	63	68	74	79	84	89	GPM
			(3.8)	98	151	182	220	238	257	280	299	318	337	l/min
TM-920B	1 1/4"	1 1/4"	1.0	33	47	56	63	68	82	85	92	103	115	GPM
			(3.8)	98	151	212	220	238	257	280	299	318	337	l/min
TM-1520B	1 1/4"	1 1/2"	1.0	48	65	80	95	112	120	130	140	158	165	GPM
			(3.8)	182	246	303	360	424	454	492	530	598	625	l/min

LIMITED WARRANTY

Leonard Valve Company (hereinafter, "Leonard") warrants the original purchaser that products manufactured by Leonard will be free from defects in material or workmanship under normal conditions of use, when properly installed and maintained in accordance with Leonard's instructions, for a period of one year from the date of shipment. During this period, Leonard will at its option repair or replace any product, or part thereof, which shall be returned, freight prepaid, to the Leonard factory and determined by Leonard to be defective in materials or workmanship. Leonard provides no warranty, express or implied, which extends beyond the description contained herein. LEONARD SPECIFICALLY DISCLAIMS ANY AND ALL IMPLIED WARRANTIES OF MERCHANTABILITY OR OF FITNESS FOR A PARTICULAR PURPOSE. Nonetheless, some jurisdictions may not allow the disclaimer of certain implied warranties, in which case Leonard hereby limits such implied warranties to the duration of the limited warranty period contained herein. Some jurisdictions may not allow limitations on how long an implied warranty lasts, so the foregoing durational limitation may not apply to you. In no event will Leonard be liable for labor or incidental or consequential damages. Any alteration or improper installation or use of this product will void this limited warranty. If any provision of this limited warranty is prohibited by law in the applicable jurisdiction, such provision shall be null and void, but the remainder of this limited warranty shall continue in full force and effect.